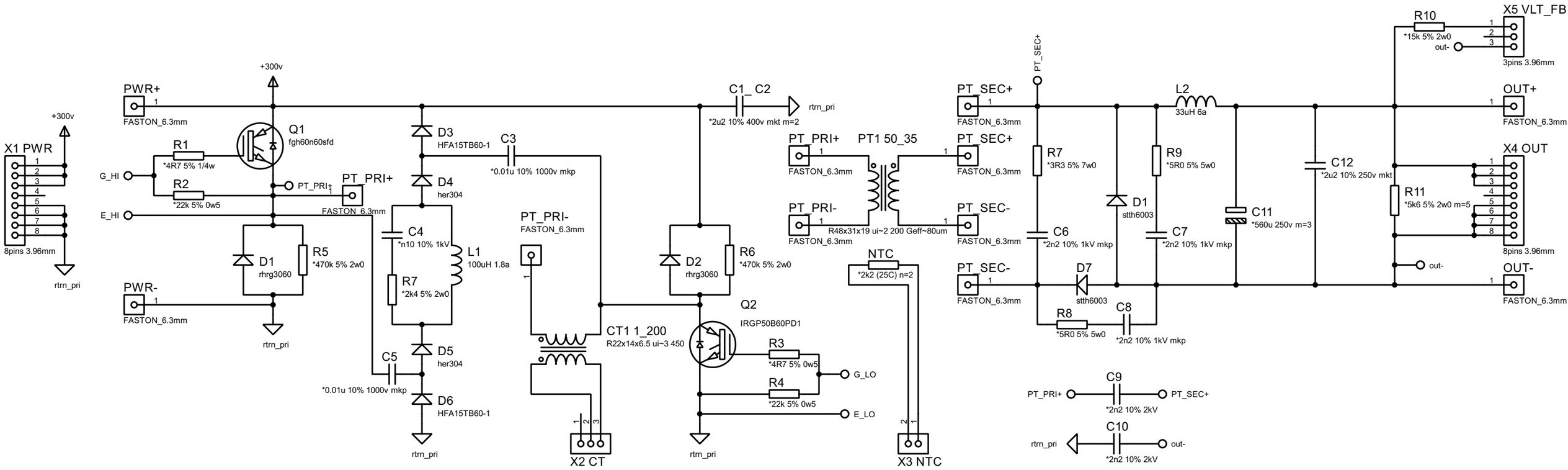
X1 PWR
8pins 3.96mm
+300v
rtrn_pri
PWR+
FASTON_6.3mm
PWR-
FASTON_6.3mm
G_HI
E_HI
R1
*4R7 5% 1/4w
R2
*22k 5% 0w5
Q1
fgh60n60sfd
PT_PRI+
FASTON_6.3mm
D1
rhrg3060
R5
*470k 5% 2w0
D3
HFA15TB60-1
D4
her304
C3
*0.01u 10% 1000v mkp
C4
*n10 10% 1kV
L1
100uH 1.8a
R7
*2k4 5% 2w0
D5
her304
C5
*0.01u 10% 1000v mkp
D6
HFA15TB60-1
PT_PRI-
FASTON_6.3mm
CT1 1_200
R22x14x6.5 ui~3 450
X2 CT
3pins 2.54mm
C1_ C2
*2u2 10% 400v mkt m=2
D2
rhrg3060
R6
*470k 5% 2w0
Q2
IRGP50B60PD1
R3
*4R7 5% 0w5
R4
*22k 5% 0w5
G_LO
E_LO
PT_PRI+
FASTON_6.3mm
PT_PRI-
FASTON_6.3mm
PT1 50_35
R48x31x19 ui~2 200 Geff~80um
NTC
*2k2 (25C) n=2
X3 NTC
2pins 2.54mm
PT_SEC+
PT_SEC+
FASTON_6.3mm
PT_SEC+
FASTON_6.3mm
PT_SEC-
FASTON_6.3mm
PT_SEC-
FASTON_6.3mm
R7
*3R3 5% 7w0
C6
*2n2 10% 1kV mkp
D7
stth6003
R8
*5R0 5% 5w0
C8
*2n2 10% 1kV mkp
D1
stth6003
C7
*2n2 10% 1kV mkp
L2
33uH 6a
R9
*5R0 5% 5w0
C11
*560u 250v m=3
C12
*2u2 10% 250v mkt
C9
*2n2 10% 2kV
C10
*2n2 10% 2kV
PT_PRI+
PT_SEC+
rtrn_pri
out-
R10
*15k 5% 2w0
out-
X5 VLT_FB
3pins 3.96mm
OUT+
FASTON_6.3mm
X4 OUT
8pins 3.96mm
R11
*5k6 5% 2w0 m=5
out-
OUT-
FASTON_6.3mm