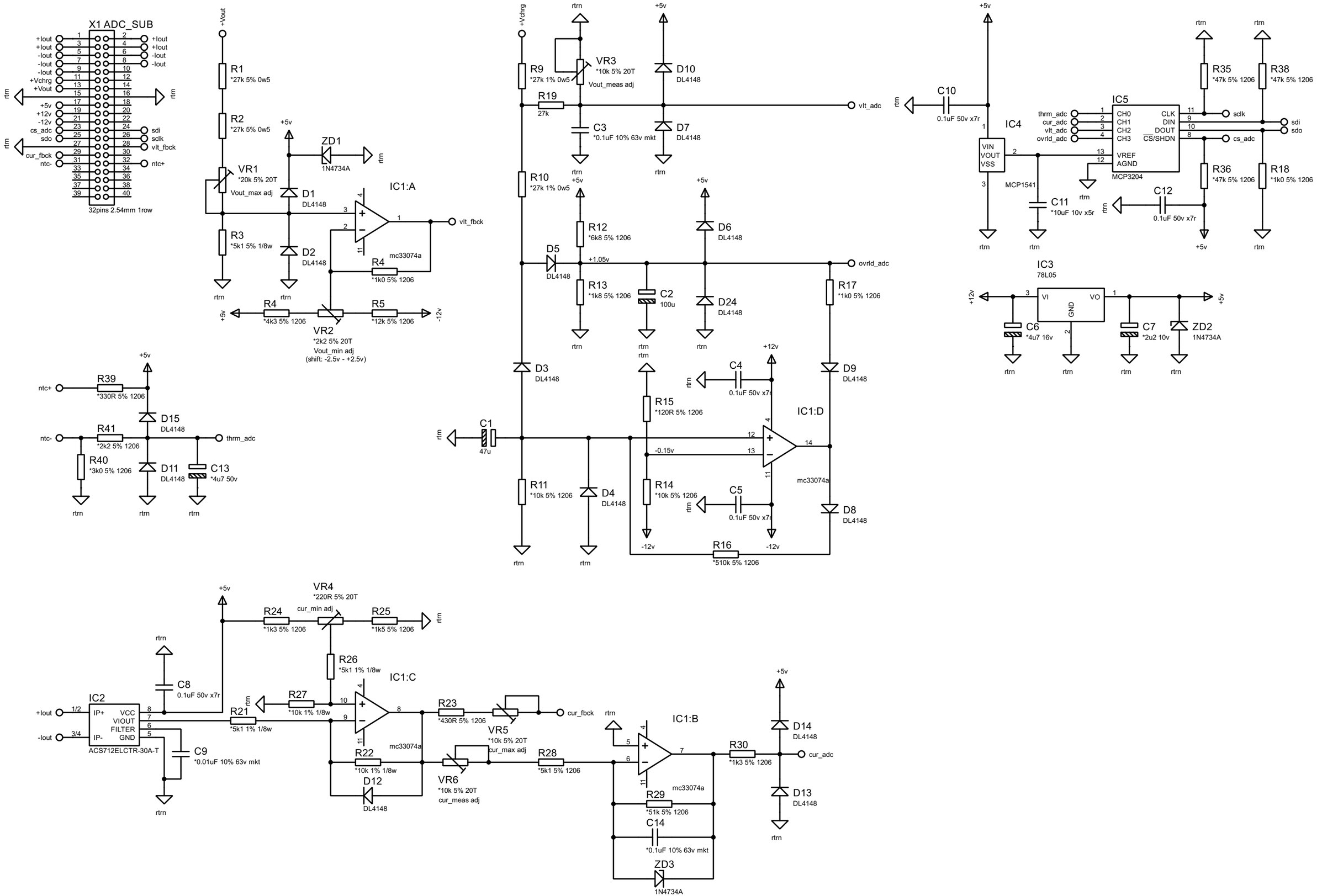
X1 ADC_SUB
+Iout
+Iout
-Iout
-Iout
-Iout
+Vchrg
+Vout
+5v
+12v
-12v
cs_adc
sdo
cur_fbck
ntc-
ntc+
sdi
sclk
vlt_fbck
32pins 2.54mm 1row
R1 *27k 5% 0w5
R2 *27k 5% 0w5
VR1 *20k 5% 20T Vout_max adj
R3 *5k1 5% 1/8w
ZD1 1N4734A
D1 DL4148
D2 DL4148
IC1:A
mc33074a
R4 *1k0 5% 1206
R4 *4k3 5% 1206
VR2 *2k2 5% 20T Vout_min adj (shift: -2.5v - +2.5v)
R5 *12k 5% 1206
R39 *330R 5% 1206
D15 DL4148
R41 *2k2 5% 1206
R40 *3k0 5% 1206
D11 DL4148
C13 *4u7 50v
thrm_adc
R9 *27k 1% 0w5
VR3 *10k 5% 20T Vout_meas adj
R19 27k
C3 *0.1uF 10% 63v mkt
D10 DL4148
D7 DL4148
vlt_adc
R10 *27k 1% 0w5
R12 *6k8 5% 1206
D5 DL4148
+1.05v
R13 *1k8 5% 1206
C2 100u
D6 DL4148
D24 DL4148
ovrld_adc
R17 *1k0 5% 1206
D3 DL4148
C4 0.1uF 50v x7r
R15 *120R 5% 1206
C1 47u
IC1:D
-0.15v
R11 *10k 5% 1206
D4 DL4148
R14 *10k 5% 1206
C5 0.1uF 50v x7r
D9 DL4148
D8 DL4148
R16 *510k 5% 1206
C10 0.1uF 50v x7r
IC4
VIN VOUT VSS
MCP1541
C11 *10uF 10v x5r
IC5
CH0 CH1 CH2 CH3
CLK DIN DOUT CS/SHDN
VREF AGND
MCP3204
thrm_adc cur_adc vlt_adc ovrld_adc
R35 *47k 5% 1206
R38 *47k 5% 1206
R36 *47k 5% 1206
R18 *1k0 5% 1206
C12 0.1uF 50v x7r
IC3 78L05
VI VO GND
C6 *4u7 16v
C7 *2u2 10v
ZD2 1N4734A
VR4 *220R 5% 20T cur_min adj
R24 *1k3 5% 1206
R25 *1k5 5% 1206
R26 *5k1 1% 1/8w
IC1:C
IC2
IP+ IP- VCC VIOUT FILTER GND
ACS712ELCTR-30A-T
C8 0.1uF 50v x7r
C9 *0.01uF 10% 63v mkt
R21 *5k1 1% 1/8w
R27 *10k 1% 1/8w
R22 *10k 1% 1/8w
D12 DL4148
R23 *430R 5% 1206
VR5 *10k 5% 20T cur_max adj
VR6 *10k 5% 20T cur_meas adj
cur_fbck
R28 *5k1 5% 1206
IC1:B
R29 *51k 5% 1206
C14 *0.1uF 10% 63v mkt
ZD3 1N4734A
R30 *1k3 5% 1206
D14 DL4148
D13 DL4148
cur_adc